NOTES:
1. FINISH: HIGH POLISH
2. SEAL THREADED CONNECTION AFTER WELDING USING LOCTITE 290 OR EQUIVALENT.

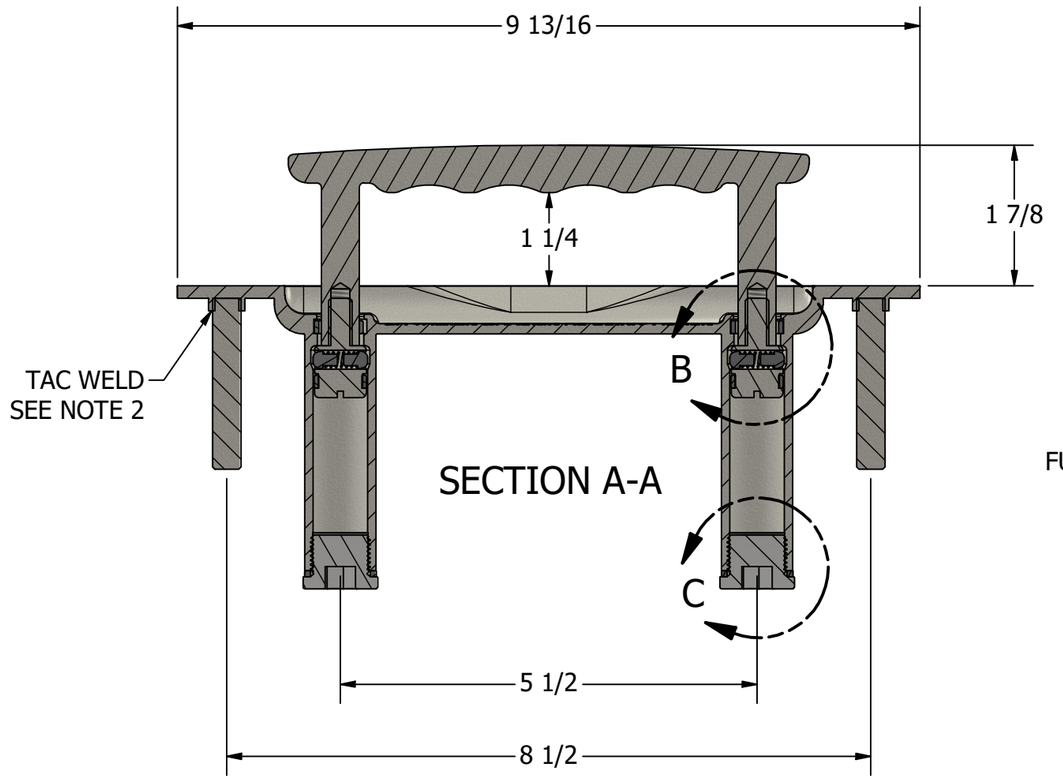

SECTION A-A

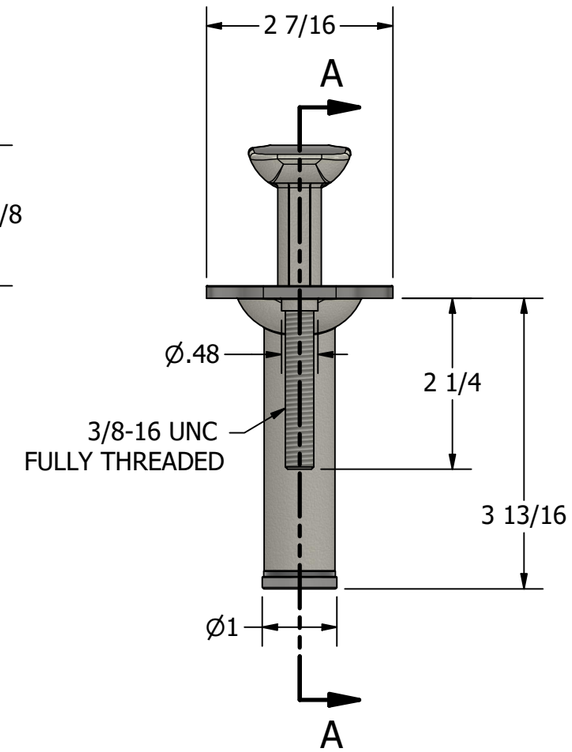

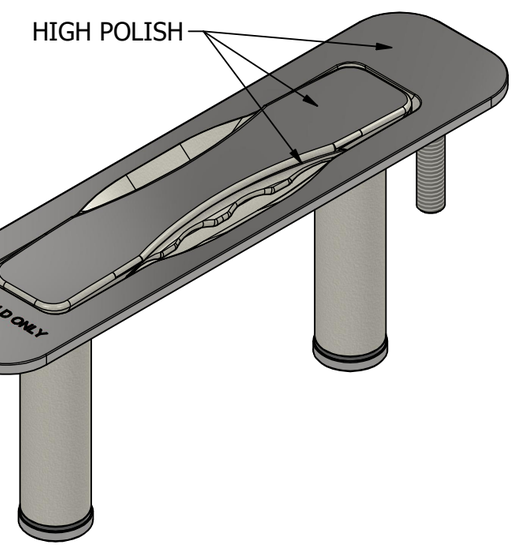

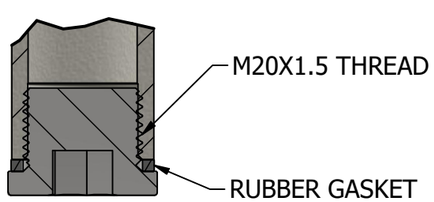

DETAIL C
SCALE 1 : 1

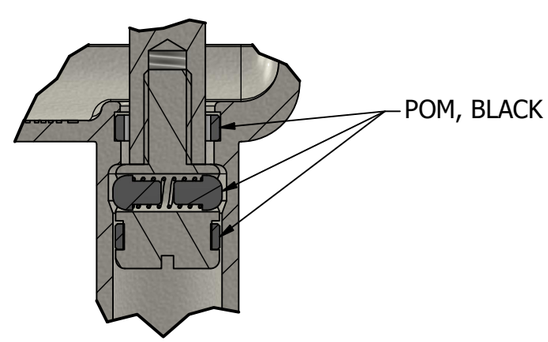

DETAIL B
SCALE 1 : 1

WHITE WATER
MARINE HARDWARE

TITLE
316SS PULL UP GRAB RAIL
PART NUMBER: 7940S (RD191)

PROPRIETARY AND CONFIDENTIAL
THE INFORMATION CONTAINED IN THIS DRAWING IS THE SOLE PROPERTY OF WHITE WATER MARINE HARDWARE. ANY REPRODUCTION IN PART OR AS A WHOLE WITHOUT WRITTEN PERMISSION IS PROHIBITED.

SIZE	DRAWING NO.	REV
B	WWMH-7940S CC	2

SCALE	DRAWN	DATE	SHEET
1 : 2	KSR	4/26/2024	1 OF 1